DEPARTMENT OF ELECTRICAL & COMPUTER ENGINEERING
OLD DOMINION UNIVERSITY
Ph.D. DIAGNOSTIC EXAMINATION
Spring 2013

ODU HONOR PLEDGE

I pledge to support the Honor system of Old Dominion University. I will refrain from any form of academic dishonesty or deception, such as cheating or plagiarism. I am aware that as a member of the academic community, it is my responsibility to turn in all suspected violators of the Honor Code. I will report to a hearing if summoned.

Student Signature: _____

Student Name (BLOCK CAPITALS): _____

UIN Number: _____

Please turn in this examination document with the pledge above signed and with one answer book for each solved problem.

1. This examination contains 26 problems from the following six areas:

A.	MATH (At most 3 problems can be answered from the Math area)	A1	A2	A3	A4			
B.	CIRCUITS & ELECTRONICS	B1	B2	B3				
C.	SYSTEMS, SIGNAL AND IMAGE PROCESSING	C1	C2	C3	C4	C5	C6	
D.	PHYSICAL ELECTRONICS I	D1	D2	D3	D4			
E.	PHYSICAL ELECTRONICS II	E1	E2	E3				
F.	COMPUTER SYSTEMS	F1	F2	F3	F4	F5	F6	

2. You must answer Eight problems, but no more than three from the MATH group.
3. Answer in the blue books provided. **Use a separate book for each problem. Put the title and problem number on the front of each book (eg. MATH A-1)**
4. Return all the 26 problems.
5. You will be graded on your answers to Eight problems only**.**
6. The examination is "closed-book;" only blue books, exam problems and a scientific calculator are allowed. **No formula sheet is allowed**. Some problems include reference formulas. No material shall be shared without prior permission of the proctor(s).
7. You have four hours to complete this examination.

PROBLEM A1 – MATH

<u>Complex Variables and Differential Equations</u>

Consider a differential equation

$$\dot{x}(t) = a(t)x(t) + b(t)u(t), x(0) = x_0$$

where *a(t)*, *b(t)* and *u(t)* are continuous real-valued functions.

(a) Determine the solution *x(t)* when *a(t) = a and b(t) = b* for all *t*, where *a* and *b* are real numbers.

(b) Determine the solution *x(t)* when *a(t)* and *b(t)* are arbitrary continuous functions.

PROBLEM A2 – MATH

Vector Calculus

Consider the function $f(x) = x^2 + y^2$.

a) Make a sketch of f. You do not need to be numerically accurate, but you need to capture the qualitative shape of f.
b) Compute the vector field $A = grad(f)$.
c) Make a sketch of A. Again, you do not need to be numerically accurate, but capture A qualitatively.
d) Compute $curl(A)$.
e) It is possible to compute $curl(grad(f))$ even without knowing f. What is the result, and how can it be interpreted?

PROBLEM A3 – MATH

Linear Algebra

Consider the 3×3 matrix $A = \begin{bmatrix} 2 & -1 & 0 \\ -1 & 2 & -1 \\ 0 & -1 & 2 \end{bmatrix}$ and vector $\underline{x} = \begin{bmatrix} x_1 \\ x_2 \\ x_3 \end{bmatrix} \in \Re^3$.

1. Write the expression of the quadratic function $f : \Re^3 \to \Re$ associated with matrix A as a function of 3 variables, $f(x_1, x_2, x_3)$.
2. Define the Rayleigh quotient for matrix A and argue that the function f derived in part 1 satisfies the constrained inequality $1 \le f(x_1, x_2, x_3) \le 3$ for all x_1, x_2, x_3 such that $x_1^2 + x_2^2 + x_3^2 = 1$.
3. Find a coordinate transformation T such that in the transformed coordinates $\underline{y} = T\underline{x}$ the function f derived in part 1 is written as a weighted sum of squares of the new variables y_1^2, y_2^2, and y_3^2.

PROBLEM A4 – MATH

Probability

(a) Each side of a triangle is painted with equal probability one of three possible colors. What is the probability that at least two adjacent sides have the same color?

(b) Repeat part (a) for a square.

PROBLEM B1 – CIRCUITS AND ELECTRONICS

Circuits

Sinusoidal Steady State Analysis

A. Find the rms value of the following periodic signal, f(t).

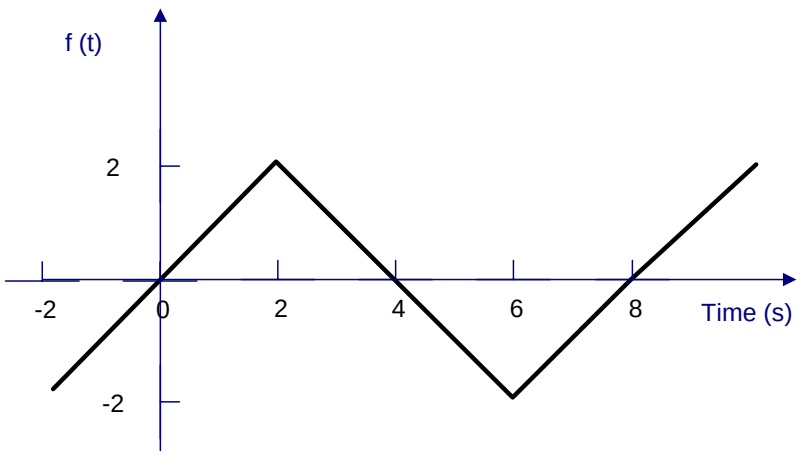

B. Find the Thevenin's equivalent circuit looking into the terminals a,b if the frequency of operation is 25 krad/s

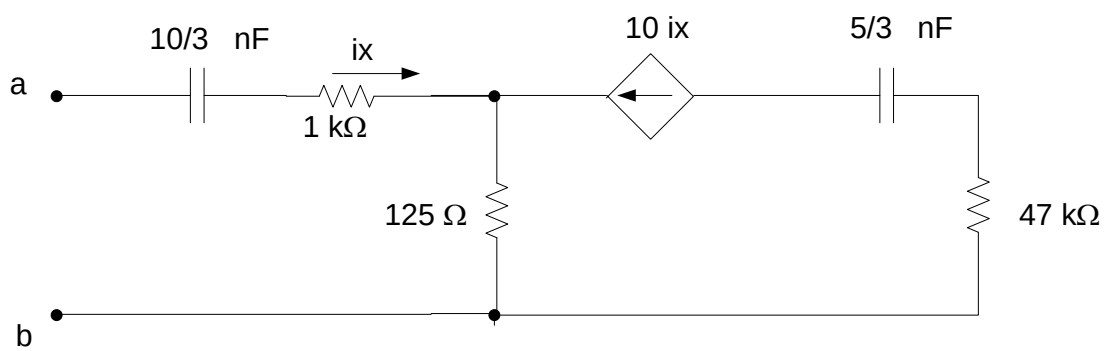

PROBLEM B2 – CIRCUITS AND ELECTRONICS

Circuits

Laplace Application to Circuit Analysis

A. Given that $F(s) = L\{f(t)\}$, show that

$$L\{t^n f(t)\} = (-1)^n \frac{d^n F(s)}{ds^n}$$

B. The op-amp in the circuit shown is ideal.

a. Find the transfer function $\frac{V_o(s)}{V_g(s)}$.

b. Find the steady state expression for $v_o(t)$ if $v_g(t) = 8\cos(2000t)\ mV$.

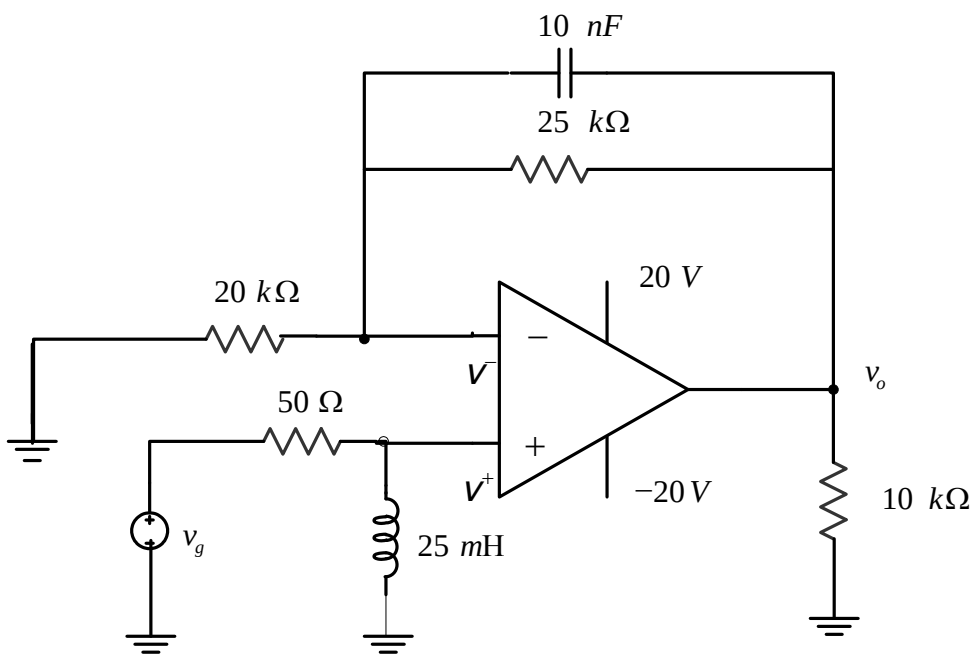

PROBLEM B3 – CIRCUITS AND ELECTRONICS

Electronics

For the below circuit, find the labeled node voltages of V1, V2, and V3. The NMOS transistors have Vt=1V and k'W/L=5mA/V^2

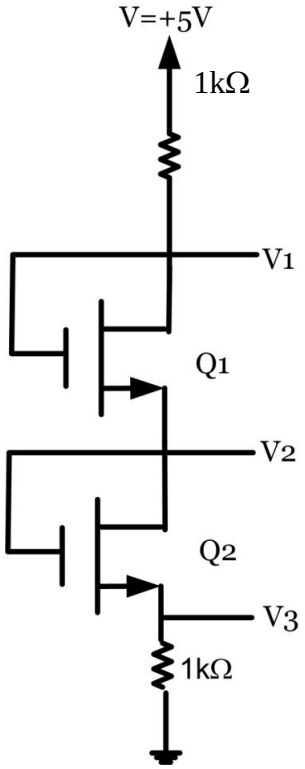

PROBLEM C1 – SYSTEMS, SIGNALS AND IMAGE PROCESSING

Image Processing

Prove that both 2D continuous and discrete Fourier transforms are linear operations.
Must show all work for maximum credit!

PROBLEM C2 – SYSTEMS, SIGNALS AND IMAGE PROCESSING

Digital Signal Processing

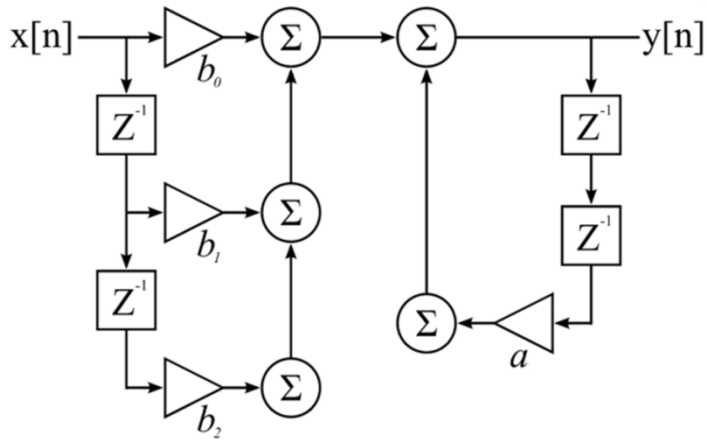

Given the discrete time system above with $\boldsymbol{a} = [\frac{1}{4}]$ and $\boldsymbol{b_N} = [\underline{1} \quad -\frac{1}{2} \quad \frac{5}{16}]$, answer the following questions.

a) Determine **H(z) = Y(z)/X(z)**
b) Compute the first four samples of the impulse response **h[n]**
c) Determine the poles and zeros of the system and sketch the pole-zero plot.
d) Determine the DC gain of the system.
e) Determine the gain of the system at the highest possible frequency.
f) Determine **y[n]** if **x[n]** = $\mathbf{2 + 3\sin\left(\pi n + \frac{\pi}{4}\right)}$
g) Determine **y[n]** given **x[n] = [$\underline{0}$ -8 0 2].**

PROBLEM C3 – SYSTEMS, SIGNALS AND IMAGE PROCESSING

Digital Signal Processing

Q2. An analog signal, $x(t)$, has a spectrum as shown follows.

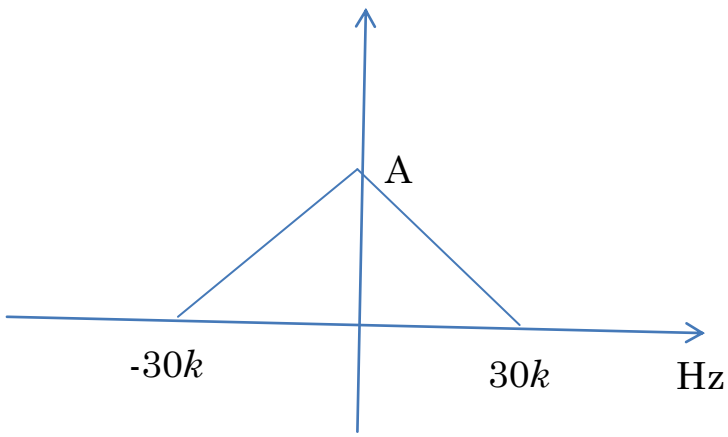

a) If you want to sample this analog signal. What is the Nyquist rate for $x(t)$? (2 points)
b) Assume that you sampled the analog signal, $x(t)$, using a sampling frequency of $80k$ Hz and obtained a discrete-time signal $x[n]$, draw the spectrum of $x[n]$. (4 points)
c) Assume that you sampled the analog signal, $x(t)$, using a sampling frequency of $50k$ Hz and obtained a discrete-time signal $x[n]$, draw the spectrum of $x[n]$. (4 points)

PROBLEM C4 – SYSTEMS, SIGNALS AND IMAGE PROCESSING

Control Systems

The transfer function of a linear system is: $G_p(s) = \dfrac{8}{(s+1)(s+8)} = \dfrac{Y(s)}{U(s)}$.

a) If its input, $u(t)$, is a unit step, determine the steady-state error, percent overshoot, and approximate settling time.
b) Consider now the unity feedback system in Figure 1. If $G_c(s)=1$, that is, if a unit gain proportional controller is used, determine the steady-state error to a unit step input, and the percent overshoot. Would the settling time of the closed-loop system be larger or smaller than the settling time of the open-loop system?
c) If the only specifications of interest are steady-state error, percent overshoot and settling time, why would a closed-loop system be considered?

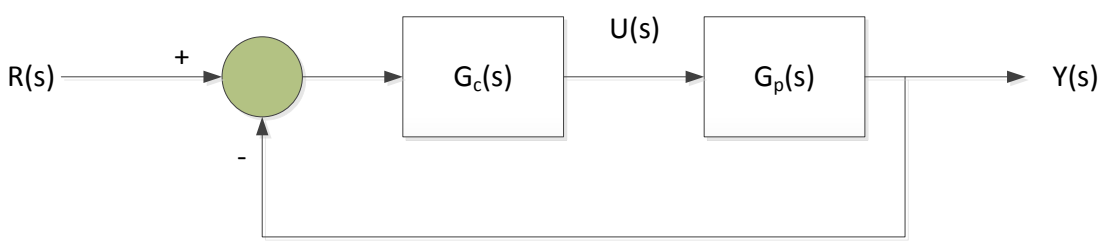

Figure 1. Unity feedback system for Control Systems Problem.

REVIEW FOR CONTROL SYSTEMS PROBLEM

For a prototype second order open-loop transfer function $G(s) = \omega_n^2/(s^2 + 2\varsigma\omega_n s + \omega_n^2)$ the following unit step response relations are useful:

- percent overshoot = $100 \exp(-\varsigma\pi / \mathrm{sqrt}(1 - \varsigma^2))$
- 2% settling time $\approx 4 / (\varsigma\omega_n)$

Suppose that the loop gain of the closed-loop system can be written as $KG(s)$ with

$G(s) = K_G \dfrac{\prod_{i=1}^{m}(s - z_i)}{\prod_{j=1}^{n}(s - p_j)}$, where K is the gain of the controller that needs to be determined, $G(s)$ represents the loop gain when K=1, and the loop gain has m zeros at z_i and n poles at p_j. The magnitude condition of root locus states that

$$|K| = \frac{\prod_{j=1}^{n}|s-p_j|}{K_G\left(\prod_{i=1}^{m}|s-z_i|\right)}, \quad \text{whenever } s \text{ a closed-loop pole}.$$

PROBLEM C5 – SYSTEMS, SIGNALS AND IMAGE PROCESSING

Communication systems

Consider a real-valued information-bearing signal $m(t)$ bandlimited to $[-W, W]$ and a sinusoidal carrier $c(t) = A_c \cos(2\pi f_c t)$, where $f_c >> W$.

1. Describe how frequency modulation (FM) of the carrier $c(t)$ with $m(t)$ is accomplished and write the mathematical expression of the resulting FM signal $u(t)$. Argue whether FM is a linear modulation scheme or not.
   Note: you must provide mathematical proof to get credit.
2. Write the expression of the maximum frequency deviation $\Delta f_{\max}$ for the FM signal and define the modulation index β_f for the FM scheme.
3. Write the expressions of the pre-envelope signal $u_+(t)$ and of the complex envelope $\tilde{u}(t)$ corresponding to the FM signal $u(t)$, and determine the in-phase and quadrature components $u_I(t)$ and $u_Q(t)$ of the FM signal.
4. Consider now that the modulating signal $m(t) = A_m \cos(2\pi f_m t)$, where $f_c >> f_m$. Note that $m(t)$ is periodic and state whether the corresponding FM signal is periodic. How about the corresponding complex envelope signal, is it periodic or not? Note: you must provide mathematical proof to get credit.

USEFUL TRIONOMETRIC IDENTITIES

$$\cos(x)\cos(y) = \frac{\cos(x-y) + \cos(x+y)}{2}$$

$$\sin(x)\sin(y) = \frac{\cos(x-y) - \cos(x+y)}{2}$$

$$\sin(x)\cos(y) = \frac{\sin(x-y) + \sin(x+y)}{2}$$

$$\cos(x) = \frac{e^{jx} + e^{-jx}}{2} \qquad \sin(x) = \frac{e^{jx} - e^{-jx}}{2j}$$

PROBLEM C6 – SYSTEMS, SIGNALS AND IMAGE PROCESSING

Communication Networks

Error detecting and correcting codes are widely used on wireless links, which are very noisy and error prone. The probability that a single bit in a given frame is corrupted during transmission is very high, therefore methods are needed to detect such errors and correct the corrupt data such that re-transmission is avoided.

1) **(2 points)** Name a few popular approaches of detecting and correcting errors in the Data Link Layer during transmission of data. By using Hamming code, can the receiver detect and correct more than one corrupted bit?

2) **(2 points)** Given the following data, calculate the parity bit:

    a. Odd-Parity: 1101000111000000

    b. Even-Parity: 1010000100101000

3) **(6 points)** Hamming Code

    a. **(2 points)** Calculate the hamming code for the following data: 10101101011

Bit #	1	2	3	4	5	6	7	8	9	10	11	12	13	14	15
Data			**1**		**0**	**1**	**0**		**1**	**1**	**0**	**1**	**0**	**1**	**1**

    b. **(4 points)** Assume that bit #14 was flipped (from 1 to 0) during transmission. Show the received frame and the calculation of the Hamming code at the receiver. Show how the receiver can detect that bit #14 was the corrupted one.

PROBLEM D1 – PHYSICAL ELECTRONICS I

Electromagnetics

Show that an elliptically polarized wave can be decomposed into two circularly polarized waves, one left-handed and the other right-handed.

PROBLEM D2 – PHYSICAL ELECTRONICS I

Electromagnetics

Assume time-harmonic fields for electromagnetic waves in the free space propagate onto the perfect conducting material. The electric field is given as below.

$$E = -\hat{z}E_0 e^{jky}$$

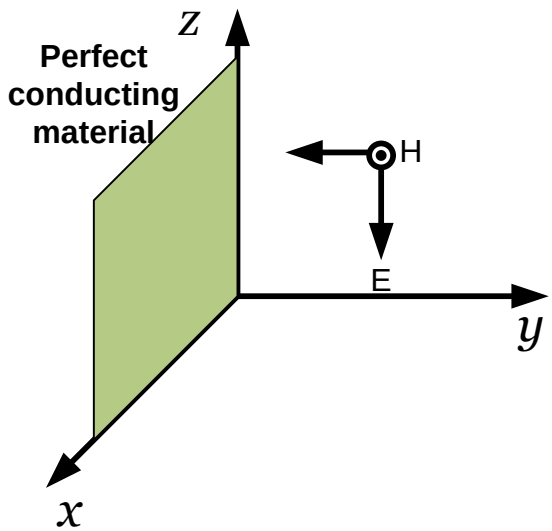

Using the boundary conditions, calculate the surface current density J_s at the perfect conductor surface?

PROBLEM D3 – PHYSICAL ELECTRONICS I

Lasers

A four-level system is optically pumped on the 0 → 3 transition with State 3 decaying to 2 at a rate of 1×10^{-9} s. State 2 has a lifetime of 0.25×10^{-3} s and decays to both States 0 and 1 with a branching ratio of 0.4 and 0.6, respectively. State 1 decays back to State 0 with a lifetime of 0.25×10^{-9} s.

(a) Formulate the rate equations that describe the dynamics of the populations. Neglect stimulated emission on the 2 → 1 route. (10 points)

(b) Compute the amount of absorbed power (per unit volume) to maintain the steady state population in State 2 at 1×10^{19} cm^{-3} given that State 3 is 2 eV above State 0. (1 eV = 1.6×10^{-19} J) (10 points)

(c) Show that we have a population inversion in this system? (5 points)

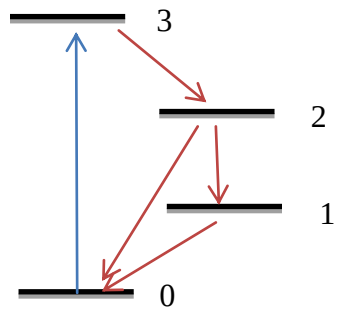

Mass of electron =	9.11×10^{-31} kg	Gas constant =	8.314 J/(mol-K°)
Mass of hydrogen atom =	1.67×10^{-27} kg	Planck's constant =	6.63×10^{-34} J-sec
Charge of electron =	1.6×10^{-19} C	Permittivity of free space =	8.85×10^{-12} F/m
Avagadro's number =	6.02×10^{23} particles/mole	Permeability of free space =	1.26×10^{-6} H/m
Boltzmann's constant =	1.38×10^{-23} J/K	Velocity of light in free space =	3×10^{8} m/s

1 atm = 760 torr = 1.013×10^{5} N/m^2; 1 Å = 10^{-8} cm

eV electron volt 1.6×10^{-19} J

1 eV of temperature KT 11,600°K

$$\int_0^\infty e^{-x^2}\,dx = \frac{\pi^{1/2}}{2}$$

$$\int_0^\infty x^{1/2} e^{-ax}\,dx = \frac{(\pi/a)^{1/2}}{2a}$$

$$\int_0^\infty x^n e^{-ax^2}\,dx = \begin{cases} \dfrac{(1)(3)(5)\cdots(n-1)}{2(2a)^{n/2}}\left(\dfrac{\pi}{a}\right)^{1/2} & \text{for even } n \geq 2 \\[2ex] \dfrac{[(n-1)/2]!}{2a^{(n+1)/2}} & \text{for odd } n \geq 1 \end{cases}$$

$$\int_{-\infty}^{\infty} x^n e^{-ax^2}\,dx = \begin{cases} 2\int_0^\infty x^n e^{-ax^2}\,dx & \text{for even } n \\ 0 & \text{for odd } n \end{cases}$$

$$\frac{2}{\pi^{1/2}}\int_0^z e^{-x^2}\,dx = \text{erf}\,(z)$$

PROBLEM D4 – PHYSICAL ELECTRONICS I

Optical Fiber Communications

A manufacturer wishes to make a silica-core, step-index cylindrical fiber with V= 75 and a numerical aperture NA = 0.30 to be used at λ = 820 nm. If the refractive index of the core is n_1=1.458, what should the diameter core size and the cladding refractive index be?

PROBLEM E1 - PHYSICAL ELECTRONICS II

<u>Solid State Electronics</u>

An abrupt Si P-N Junction with a cross-section of $A = 10^{-4}$ cm^2 has the following properties:

P side	**N side**
$N_a = 10^{17}$ cm^{-3}	$N_d = 10^{15}$ cm^{-3}
$\tau_n = 0.1$ µs	$\tau_p = 10$ µs
$\mu_p = 200$ cm^2/ V-s	$\mu_n = 1300$ cm^2/ V-s
$\mu_n = 700$ cm^2/ V-s	$\mu_p = 450$ cm^2/ V-s

The junction is forward biased by 0.5 V.

a) **What is the total forward current for an ideal p-n junction at + 0.5V bias?**

b) **What is the total current at a reverse bias of – 0.5V?**

c) **Calculate the junction potential Φ_0**

d) **What is the total Transition Capacitance C_T (also known as depletion capacitance) at -4 V reverse bias ?**

e) **calculate the depletion widths l_{po} and l_{no} for the following reverse biases -4 V and -10 V**

Equations: Hole Current:

$$I_p = -qAD_p\frac{dp}{dx} = qA\frac{D_p}{L_p}(\Delta p)e^{-\frac{x}{L_p}}$$

Depletion Capacitance:

$$C_j = \sqrt{\epsilon}A\left[\frac{q}{2(V_0 - V)}\frac{N_dN_a}{N_d + N_a}\right]^{1/2}$$

Physical Constants : Intrinsic carrier concentration in Si : $n_i = 1.45 \times 10^{10}$ cm^{-3}

Permittivity in Vacuum $\varepsilon = 8.8854 \times 10^{-14}$ F/ cm

Elementary Charge : $q = 1.602 \times 10^{-19}$ C

Boltzman Constant: $k = 1.38066 \times 10^{-23}$ J/ K

Thermal voltage at 300K: $kT/q = 0.0259$ V

PROBLEM E2 – PHYSICAL ELECTRONICS II

Physical Electronics

1. Using an energy-momentum diagram, explain the difference between a direct band gap semiconductor and indirect band gap semiconductor

2. A Silicon sample at 300K contains an acceptor impurity concentration of $N_A = 10^{15}$ cm^{-3}. Determine the concentration of donor impurity atoms that must be added so that the silicon is n-type and the Fermi energy is 0.20 eV below the conduction band edge.

3. Find the electron and hole concentration, mobilities and resistivities of Silicon samples at 300K, for each of the following impurity concentrations.

   a) 1.5×10^{15} Boron atoms/cm^3

   b) 5×10^{17} Boron atoms/cm^3 and 2×10^{17} Arsenic atoms/cm^3

Equations and data

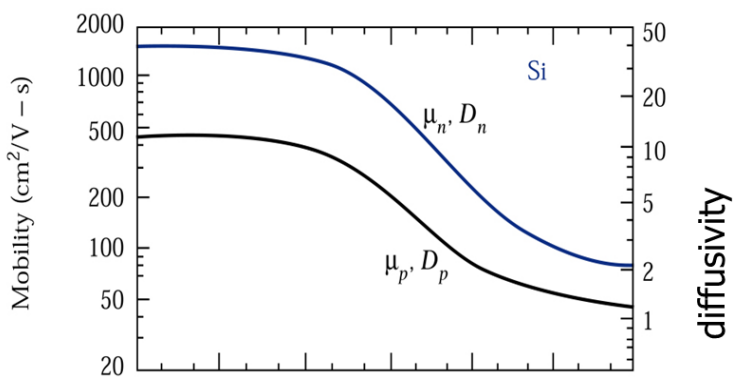

$$n = N_c \exp\left(-\frac{(E_c - E_F)}{kT}\right) \qquad p = N_v \exp\left(-\frac{(E_F - E_v)}{kT}\right)$$

$$np = n_i^2 = N_c N_v \exp\left(\frac{-Eg}{kT}\right) \qquad E_{Fi} = \frac{(E_c + E_v)}{2} + \frac{kT}{2}\ln\left(\frac{N_v}{N_c}\right)$$

Silicon (300 K): N_C= 2.86 10^{19} cm^{-3} ; N_V = 2.66 10^{19} cm^{-3} ; n_i = 9.65 10^9 cm^{-3}

m_p =1 m_0; m_n = 0.19 m_0; m_0 = 0.91 10^{-30} kg; k = 1.38 10^{-23} J/K ; q = 1.6 10^{-19} C

$$J = J_n + J_p = (qn\mu_n + qp\mu_p)\mathscr{E}. \qquad \sigma = q(n\mu_n + p\mu_p)$$

PROBLEM E3 – PHYSICAL ELECTRONICS II

Plasma Science and Discharges

A probe is inserted in a gaseous discharge with an electron temperature of 2eV. A sheath of 1mm surrounds the probe. If the sheath thickness is 5 times the Debye shielding distance, what is the electron number density in the discharge?

PROBLEM F1 - Computer Systems

Microprocessors

Write a **subroutine** that **searches for a specific half-word (16-bit) value** residing in an array in a Motorola 6811 microprocessor based system. You may assume that, when the subroutine is called, index register X is pointing at the beginning of the input array. The number of elements (half-words) in the input array is the value of the data in memory location **$0000**. The search string is in memory locations **$0011** (most significant byte), and **$0012** (least significant byte). Your subroutine will return the match count of the search value in memory location **$0010**.

You may safely use memory locations **$0001** to **$000F** for storage of any temporary variables.

You **must** (at least) provide pseudo code (in C-style) for your subroutine along with the ASM program, although you are encouraged to draw a flowchart. Either is acceptable as a supplement to your ASM code.

Details:

Style - Write your code in a tree column format, i.e.:

	LABEL*	**MNEMONIC**	**OPERAND*** (* use only when required / needed)
Example:	LOOP	BRA	LOOP

Symbols - The use of a # sign before an operand designates immediate addressing mode, $ - hexadecimal, % - binary. Example: LDAA #$F0 – The value F0 hexadecimal is loaded into AccA.

Addressing modes -			
	Immediate	example: LDAA #$F0	(A← $F0)
	Direct	example: LDAA $F0	(A← M[$00F0])
	Extended	example: LDAA $00F0	(A← M[$00F0])
	Indexed	example: LDAA 0, X	(A ← M[X+0])

Available instructions:

LDAA / STAA	:	Load / Store Accumulator A (one byte)
LDAB / STAB	:	Load / Store Accumulator B (one byte)
LDD/STD	:	Load / Store Accumulator D (A + B, double byte)
LDX / STX	:	Load / Store index register X (double byte)
LDY / STY	:	Load / Store index register Y (double byte)
LDS/STS	:	Load/Store Stack Pointer (double byte)
TSX / TXS	:	Transfer SP in X / Transfer X in SP
PSHA / PULA	:	Push / Pull AccA on / from the stack
PSHB / PULB	:	Push / Pull AccB on / from the stack
PSHX / PULX	:	Push / Pull index register X on / from the stack
PSHY / PULY	:	Push / Pull index register Y on / from the stack
CLRA	:	Clear contents of AccA (A ← $00)
CLRB	:	Clear contents of AccB (B ← $00)
CLR	:	Clear memory location contents (M ← $00)
INCA / DECA	:	Increment / Decrement AccA – Inherent addressing
INCB / DECB	:	Increment / Decrement AccB
INC / DEC	:	Increment / Decrement memory location contents
INX / DEX	:	Increment / Decrement index register X
INY / DEY	:	Increment / Decrement index register Y
INS / DES	:	Increment / Decrement stack pointer
CMPA	:	Compare AccA to memory (A – M)
CMPB	:	Compare AccB to memory (B – M)
CBA	:	Compare AccB to AccA (A-B)

CPX	:	Compare index register X to memory (X – MM)
CPY	:	Compare index register Y to memory (Y – MM)
BRA	:	Branch always - Relative addressing
BEQ	:	Branch if equal to zero
BNE	:	Branch if not equal to zero
BGT	:	Branch if greater than zero
BLT	:	Branch if less than zero
BGE	:	Branch if greater than or equal to zero
BLE	:	Branch if less than or equal to zero
BMI	:	Branch if minus
BPL	:	Branch is plus
JMP	:	Jump to the given address – Absolute addressing
RTS	:	Return from subroutine

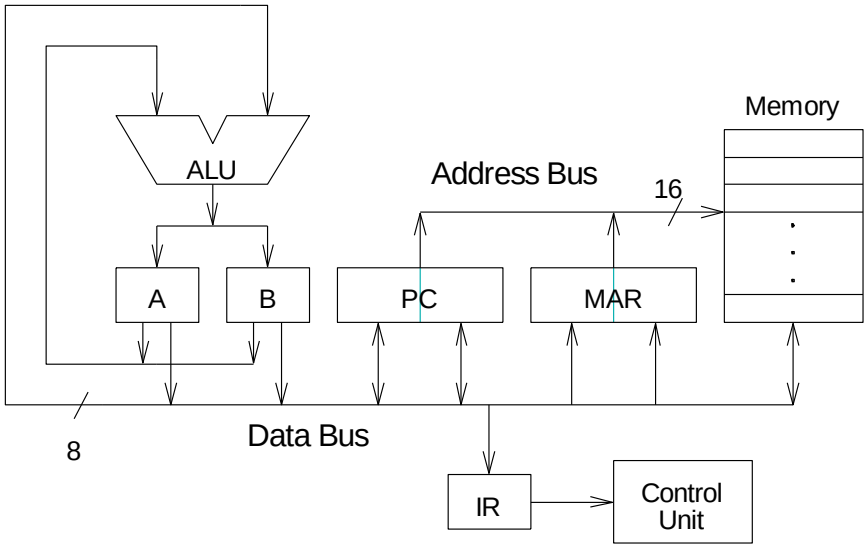

Figure 1 – Motorola 6811 simplified architecture.

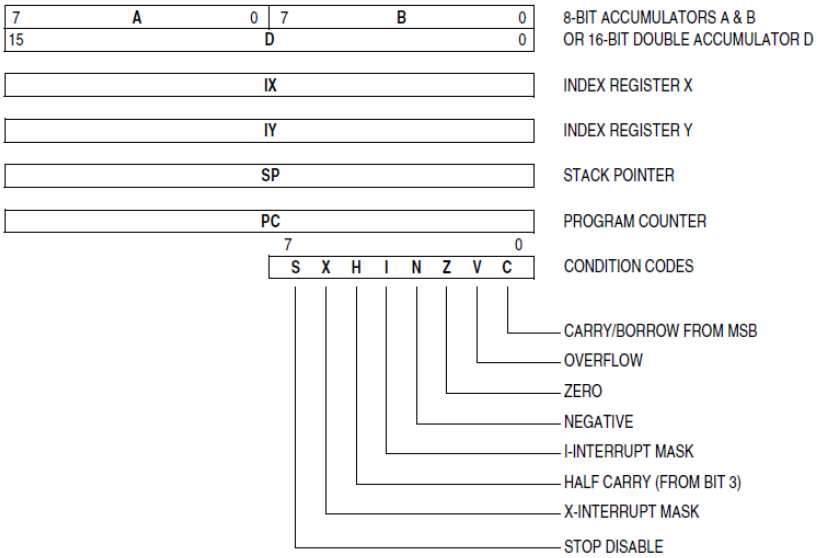

Figure 2 – Motorola 6811 programming model.

PROBLEM F2 – COMPUTER SYSTEMS

Digital System Design

Problem Description:

Use the following SM Chart for this problem:

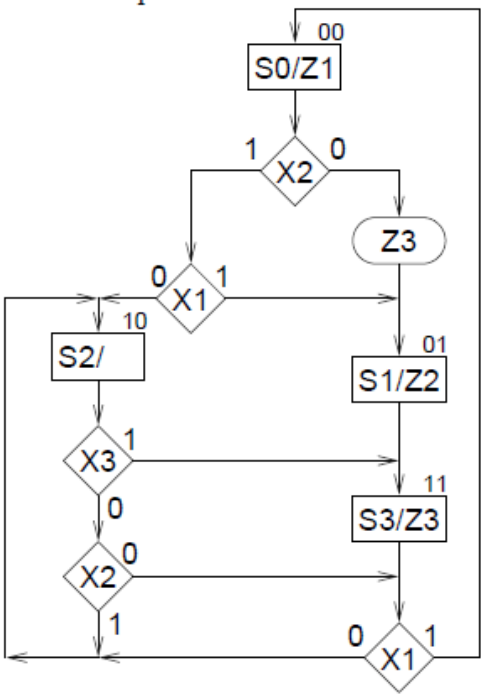

1. (5 points) For the SM chart, give the SM table for the indicated state assignment. In addition, give the next state & output equations. Do not simplify next state and output equations.

2. (5 points) Assuming the logic element shown, give the number of logic elements required to implement the SM chart above as well as their programming configuration. Note that each logic element includes one D flip-flop, two multiplexers, and a look-up table (LUT). For the multiplexers, clearly show how each multiplexer must be configured to fulfill the required function. For each LUT, give the full contents of the LUT memory.

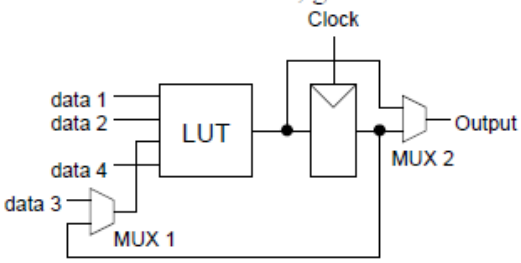

PROBLEM F3 – COMPUTER SYSTEMS

Computer Architecture

You are to work on the design of a stack-based architecture. You are to develop the concrete RTL targeted to the architecture below for 2 operand and 1 operand instructions as defined by the following abstract RTL:

2 operand: M[SP+2] ← M [SP + 1] **op** M [SP + 2]; SP ← SP + 1

1operand: M[SP + 1] ← **op** M[SP + 1]

Control of the operations has been partitioned into the following state diagram:

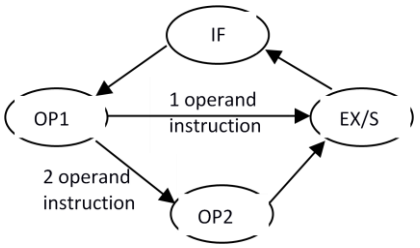

IF: Instruction Fetch
OP1: Operand 1 Fetch
OP2: Operand 2 Fetch
EX/S : Execute and Store

You should define the concrete RTL for each of the control states (IF, OP1, OP2, and EX/S) such that it is common for both 1 and 2 operand instructions with the exception of the control signals to select the operation (op) and that OP2 is only executed for 2 operand instructions.

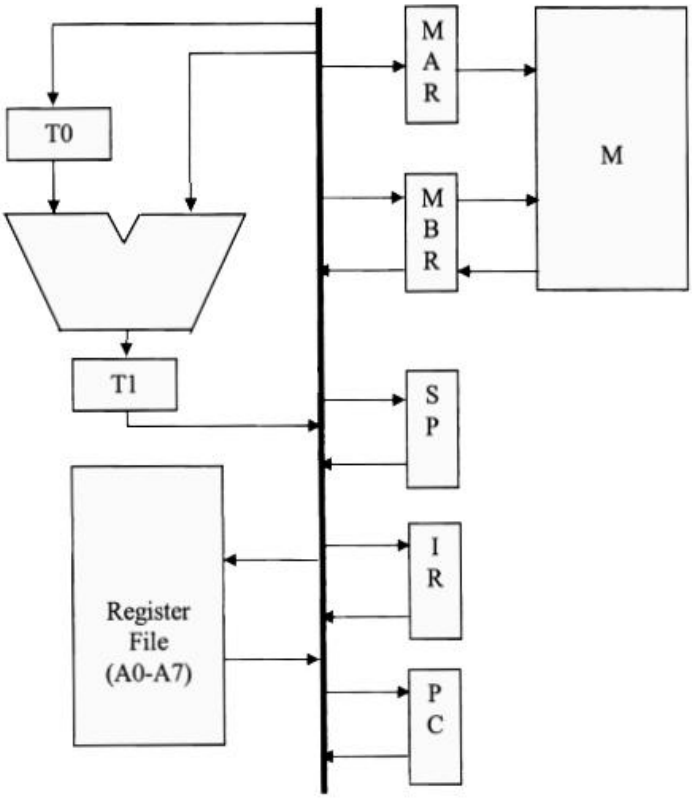

PROBLEM F4 – COMPUTER SYSTEMS

Algorithms

You are given a list of n elements with two keys, *true* and *false*.

Outline an $O(n)$ algorithm that rearranges the list so that all *false* elements precede all *true* elements. You may use only constant extra space.

State any assumptions you make in your algorithm as well as any temporary variables required.

PROBLEM F5 – COMPUTER SYSTEMS

Data Structures

A stack `bStack` contains the following items

10, 1,-5, 22, 33, 44

What is the output to the screen of the following code?

```
int x;
while (!bStack.isEmpty()){
  bStack.pop(x);
  if (x>0 && !bStack.isEmpty())
    bStack.pop();
  cout << x << endl;
}
```

PROBLEM F6 – COMPUTER SYSTEMS

Data Structures

Provide a pseudo code or diagram with (explanations) for the following questions

Given the input sequence A= (2, 8, 9, 4, 0, 1, 3, 6),

1. Construct a binary search tree according to the input A sequence.
2. Add a node, 5, into this binary search tree.
3. Delete a node, 0, from this binary search tree.
4. Given another binary search tree with the input B sequence (4, 5, 7), how to join two trees (Input A and B) into one tree?