DEPARTMENT OF ELECTRICAL & COMPUTER ENGINEERING
OLD DOMINION UNIVERSITY
PhD DIAGNOSTIC EXAM
Spring 2016

ODU HONOR PLEDGE

I pledge to support the Honor system of Old Dominion University. I will refrain from any form of academic dishonesty or deception, such as cheating or plagiarism. I am aware that as a member of the academic community, it is my responsibility to turn in all suspected violators of the Honor Code. I will report to a hearing if summoned.

Student Signature: _____

Student Name (BLOCK CAPITALS): _____

UIN Number: _____

Please turn in this examination document with the pledge above signed and with one answer book for each solved problem. After completing exam, please circle the problems below that you completed.

1. This examination contains 26 problems from the following six areas:

A.	MATH (at most 3 problems can be answered from the Math area)	A1	A2	A3	A4		
B.	CIRCUITS & ELECTRONICS	B1	B2	B3			
C.	SYSTEMS, SIGNAL AND IMAGE PROCESSING	C1	C2	C3	C4	C5	C6
D.	PHYSICAL ELECTRONICS I	D1	D2	D3	D4		
E.	PHYSICAL ELECTRONICS II	E1	E2	E3			
F.	COMPUTER SYSTEMS	F1	F2	F3	F4	F5	F6

2. You must answer eight (8) problems, but no more than three from the MATH group.
3. Answer in the blue books provided. **Use a separate book for each problem. Put the title and problem number on the front of each book (eg., MATH A-1)**
4. Return all the 26 problems.
5. You will be graded on your answers to eight (8) problems only**.**
6. The examination is "closed-book;" only blue books, exam problems and a scientific calculator are allowed. **No formula sheet is allowed**. Some problems include reference formulas. No material shall be shared without prior permission of the proctor(s).
7. You have four hours to complete this examination.

PROBLEM A1 – MATH

A function f(z) is said to be analytic in a domain D if f(z) is defined and differentiable at all points of D. One may check if f'(z) exists by examining if the Cauchy-Riemann equations are satisfied. Find out if $f(z)=x^2-y^2+2ixy$ is analytic for all z.

PROBLEM A2 – MATH

Vector Analysis

1. **(Gradient)** Let $f(x, y)$ be a scalar function.
    a. How is the gradient of *f*, also called $grad(f)$, defined?
    b. What is the geometric meaning of $grad(f)$?
    c. Let $f(x, y) = x^2 + y^2$. Sketch f and $grad(f)$.

2. **(Divergence)**
    a. How is the divergence (div) of a vector field defined, and what its geometric meaning?
    b. For f from problem 1), compute $div\big(grad(f)\big)$.

PROBLEM A3 – MATH

Linear Algebra

1. Write the singular value decomposition (SVD) theorem for an arbitrary matrix A of dimension $m \times n$, state how the matrices involved in the SVD of matrix A are obtained, state their relationship with the four fundamental subspaces of A, and calculate the SVD for matrix $A = \begin{bmatrix} 1 & 0 \\ 0 & 2 \\ 2 & 1 \end{bmatrix}$.

2. Consider matrix $B = \begin{bmatrix} 1 & 1 \\ k^2 & 1 \end{bmatrix}$, where $k \in \Re$ and $k \neq 0$. State the condition for obtaining a stable solution for the differential equation $\underline{x}'(t) = B\underline{x}(t)$, where $\underline{x}(t) = \begin{bmatrix} x_1(t) \\ x_2(t) \end{bmatrix}$, and discuss whether matrix B implies a stable solution.

PROBLEM A4 – MATH

The U.S. Senate has 100 members. A certain bill they are considering has 49 supporters and 51 opponents. On the day of the final vote, five senators are absent due to random circumstances that are not related to the bill. What is the probability that the bill passes?

PROBLEM B1 – CIRCUITS AND ELECTRONICS

Sinusoidal Steady State Analysis

Determine I_0 as defined in the following circuit:

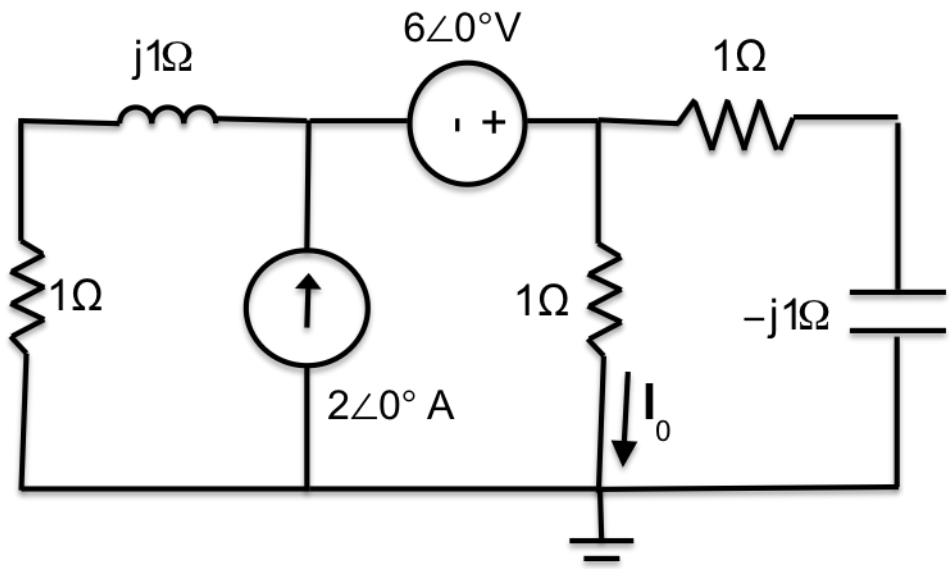

PROBLEM B2 – CIRCUITS AND ELECTRONICS

<u>Laplace Application to Circuit Analysis</u>

a) Determine the Transfer Function, $H(s) = V_o(s) / V_i(s)$, for the following circuit.
b) Determine $v_0(t)$, for C = 8, 16, and 32 Farads.

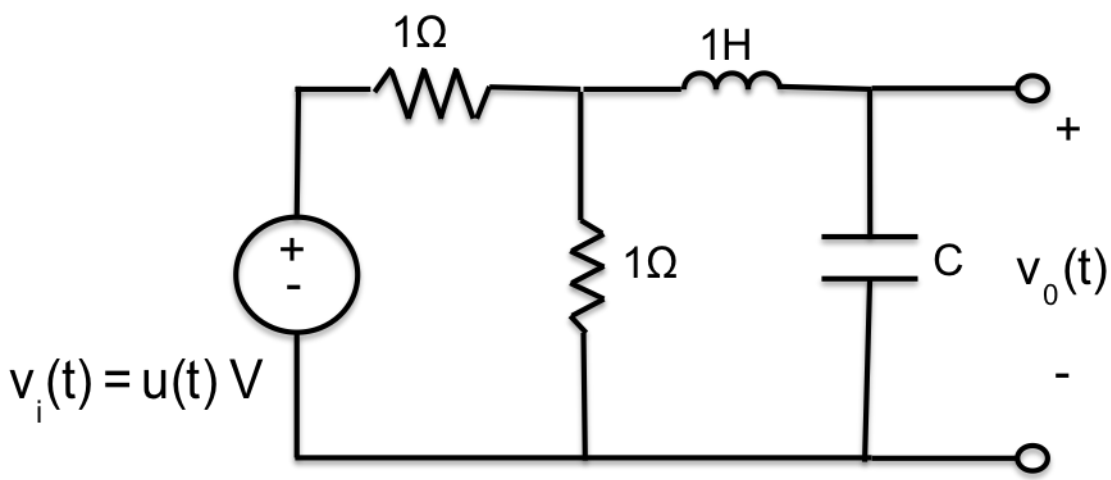

PROBLEM B3 – CIRCUITS AND ELECTRONICS

Assume that v_i is a 1 kHz, 10 V peak sine wave as shown in below figure. Assume **ideal diodes** in the circuit.

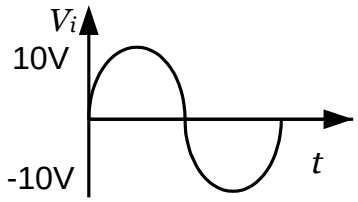

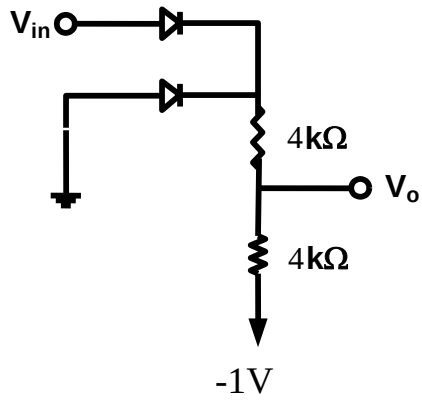

(a) Calculate V_o when Vi= 10V

(b) Calculate Vo when Vi=-10V

(c) Based on (a) and (b) results, Sketch the waveform resulting at v_o

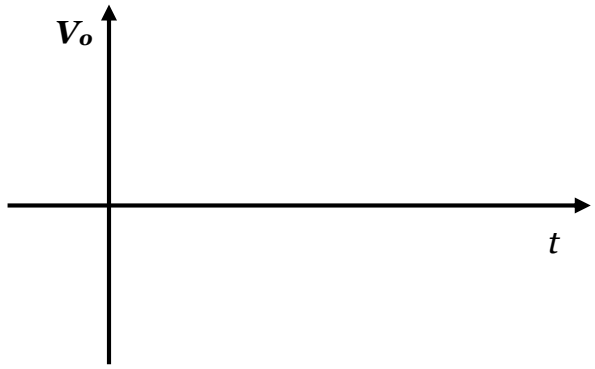

PROBLEM C1 – SYSTEMS, SIGNALS AND IMAGE PROCESSING

Consider an $M\ X\ N$ pixel gray-scale image $f(x,y)$ with the image intensity given below:

$$f(x,y) = \begin{cases} c, & y = y_0, 0 \le x \le M-1 \\ 0, & otherwise \end{cases}$$

where c is a constant between 0 and 255 and y_0 is a constant between 0 and N -1. Answer the questions below.

a) Plot the image intensity $f(x,y)$. Clearly label the axes. (2 points)

b) Find the M x N point Discrete Fourier Transform (DFT) of $f(x,y)$, where the DFT is given below. (6 points)

$$F(u,v) = \frac{1}{MN}\sum_{x=0}^{M-1}\sum_{y=0}^{N-1} f(x,y)e^{-j2\pi\left(\frac{ux}{M}+\frac{vy}{N}\right)}$$

The geometric series can be used to simplify the solution:

$$\sum_{k=0}^{L-1} a^k = \frac{1-a^L}{1-a}, \qquad |a| \le 1$$

c) Plot the magnitude of $F(u,v)$. Clearly label the axes. (2 points)

PROBLEM C2 – SYSTEMS, SIGNALS AND IMAGE PROCESSING

For the following system,

$$y[n] = \sum_{k=-\infty}^{n-1} x[k]$$

a). (5 points) Compute the impulse response, $h[n]$, of the system.

b). (3 points) Is the system stable? (2 points) Causal?

PROBLEM C3 – SYSTEMS, SIGNALS AND IMAGE PROCESSING

(10 points) Prove that

$$e^{j\Omega n}\, u[n]$$

is not an Eigen function for any stable LTID system.

PROBLEM C4 – SYSTEMS, SIGNALS AND IMAGE PROCESSING

The transfer function of a linear system is: $G_p(s) = \dfrac{8}{s(s+8)} = \dfrac{Y(s)}{U(s)}$.

a) Suppose that a proportional controller is used, $G_c(s) = K$, in Figure 1.

   i. (1 point) For what range of *K* values is the closed-loop stable?

   ii. (2 point) Choose a value of *K* that will result in a closed-loop system response that has no overshoot but has as short as possible rise time.

   iii. (2 point) What are the approximate gain and phase margins of the system for your answer in (ii)? What is the significance of these margins?

   iv. (1 point) What is the steady-state error when $R(s) = \dfrac{1}{s}$?

   v. (1 point) What is the steady-state error when $R(s) = \dfrac{1}{s^2}$?

b) (3 points) Redesign the closed-loop system in (a)(ii) so that the steady-state error is reduced by about a half.

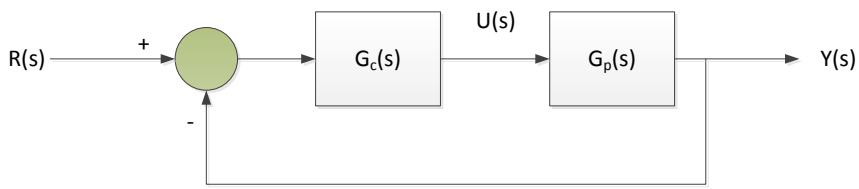

Figure 1. Unity feedback system for Control Systems Problem.

REVIEW FOR CONTROL SYSTEMS PROBLEM

For a prototype second order open-loop transfer function $G(s) = \omega_n^2/(s^2 + 2\varsigma\omega_n s + \omega_n^2)$ the following unit step response relations are useful:

- percent overshoot = $100 \exp(-\varsigma\pi / \mathrm{sqrt}(1 - \varsigma^2))$
- 2% settling time $\approx 4 / (\varsigma\omega_n)$

Suppose that the loop gain of the closed-loop system can be written as $KG(s)$ with

$G(s) = K_G \dfrac{\prod_{i=1}^{m}(s - z_i)}{\prod_{j=1}^{n}(s - p_j)}$, where *K* is the gain of the controller that needs to be determined, *G(s)* represents the loop gain when *K*=1, and the loop gain has *m* zeros at z_i and *n* poles at p_j. The magnitude condition of root locus states that

$$|K| = \frac{\prod_{j=1}^{n}|s-p_j|}{K_G\left(\prod_{i=1}^{m}|s-z_i|\right)}, \quad \text{whenever } s \text{ a closed-loop pole}.$$

PROBLEM C5 – SYSTEMS, SIGNALS AND IMAGE PROCESSING

Communications Problem

Outline the main steps to calculate the signal-to-noise ratio (SNR) at the output of a noisy demodulator for FM signals by answering the following questions:

1. Consider a real-valued information-bearing signal $m(t)$ bandlimited to $[-W, W]$ and a sinusoidal carrier $c(t) = A_c \cos(2\pi f_c t)$, where $f_c >> W$. State the principle behind frequency modulation (FM) of the carrier $c(t)$ with $m(t)$ and write the mathematical expression of the resulting FM signal $s(t)$.

2. Argue whether FM is a linear modulation scheme or not. A mathematical proof must be provided to get credit.

3. Assuming that the FM signal $s(t)$ is corrupted by noise, draw the block diagram of the noisy demodulator employing frequency discriminator and define the signal-to-noise ratio (SNR) is defined at the demodulator output. For full credit the diagram should clearly show how noise corrupts the transmitted signal, and it should include all the elements of the frequency discriminator. An explanation on how the signal and noise components are identified at the demodulator output should also be given.

4. Write the expression of the noisy received FM signal and draw the corresponding phasor diagram. For full credit the expression should clearly show how the noise process affects not only the transmitted signal $s(t)$, but also the original message signal $m(t)$.

5. Using the phasor diagram and the expressions in part 4 state what approximations are needed (if any) to define the SNR at the output of the frequency discriminator, and write the expressions of the desired signal and of the noise term involved in the calculation of the SNR.

USEFUL FORMULAS

Trigonometric identities:

$$\sin(x \pm y) = \sin x \cos y \pm \sin y \cos x$$

$$\cos(x \pm y) = \cos x \cos y \mp \sin x \sin y$$

$$\cos(x)\cos(y) = \frac{\cos(x-y) + \cos(x+y)}{2}$$

$$\sin(x)\sin(y) = \frac{\cos(x-y) - \cos(x+y)}{2}$$

$$\sin(x)\cos(y) = \frac{\sin(x-y) + \sin(x+y)}{2}$$

PROBLEM C6 – SYSTEMS, SIGNALS AND IMAGE PROCESSING

Communication Networks

1. (5 pts) Consider a signal transmitted over a 100KHz channel. The number of signal levels is 4.

(a) If the channel is noiseless, what is the maximum achievable rate?
(b) If the channel has noise and the SNR is 30 dB, what is the maximum achievable rate now?

2. (5 pts) We have a character frame A FLAG B ESC FLAG. Assume the byte stuffing framing method is used, what will be the actual frame to be transmitted? Note the special characters are FLAG and ESC.

PROBLEM D1 – PHYSICAL ELECTRONICS I

Suppose that an airplane uses a radar to measure its altitude, as shown in Fig. D1. Let the frequency of the radar be 2 GHz. Suppose further that the ground is covered with a meter of hard-packed snow. We assume snow has $\varepsilon = 1.5\varepsilon_0$ and $\tan\delta = 8\times10^{-4}$ at 2 GHz.

(a) What is the radar signal velocity in air and in snow, respectively?

(b) What is the penetration depth of the radar signal in snow? How much attenuation in dB does the radar signal suffer because of the snow? Assuming the effect of the snow on the reflection at air-snow and at snow-ground interfaces can be neglected. Consider only the attenuation of the wave in the snow.

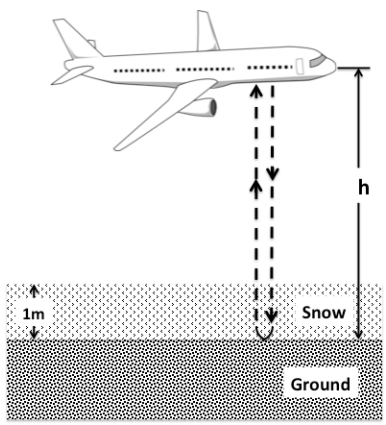

Fig. D1 Airplane radar for altitude measurements

PROBLEM D2 – PHYSICAL ELECTRONICS I

Consider an infinitesimally thin ring with inner radius r_1 and outer radius r_2 that resides in the x-y plane and is centered at z=0. The ring has a surface charge density $\rho_s = \frac{\rho_{s0}}{r}$ where r= $\sqrt{x^2 + y^2}$. Calculate the electric field E(x=0,y=0,z) on the z-axis.

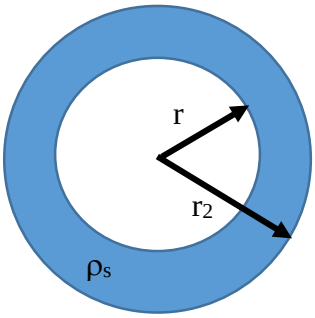

PROBLEM D3 – PHYSICAL ELECTRONICS I

Lasers (2 points each)

A) Calculate the longitudinal mode spacing for a He-Ne laser operating at 632 nm with 25 cm spacing between the mirrors. Assume n = 1 for the He-Ne gas.

B) Suppose the laser is operating in a single longitudinal mode with a bandwidth of 50 MHz. What is the corresponding linewidth in nm?

C) Consider the energy level diagram for a 4-level laser shown below. If N1, N2, N3, N4 represent the number densities of atoms in levels 1, 2, 3, and 4, respectively, state the condition for population inversion on the laser transition.

D) Write a differential equation for the population in level 3 that describes spontaneous emission from level 4 to level 3, and spontaneous and stimulated emission from level 3 to level 2.

E) Discuss gain saturation in the context of these energy levels.

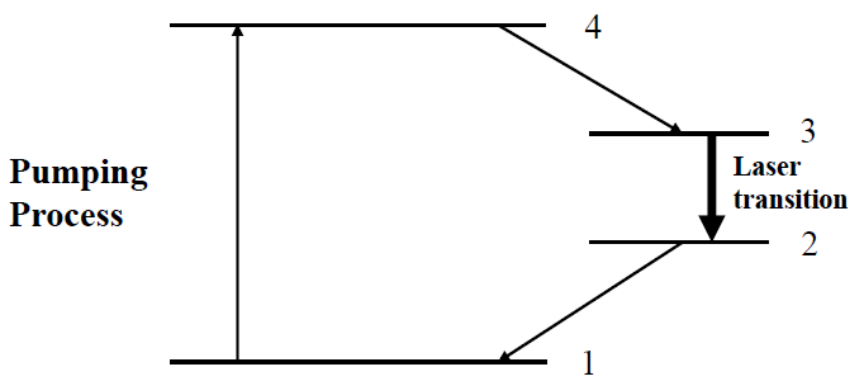

PROBLEM D4 – PHYSICAL ELECTRONICS I

Optical Fiber Communication

A silicon avalanche photodiode has a quantum efficiency of 65% at a wavelength of 900 nm. Suppose 0.5 μW of optical power produces a multiplied photocurrent of 10 μA. Find the multiplication factor, M.

$h = 6.625 \times 10^{-34}$ J.s; $q = 1.6 \times 10^{-19}$ C; $C_o = 3 \times 10^{8}$ m/s

PROBLEM E1 - PHYSICAL ELECTRONICS II

D1) A Boron Diffusion is used to form the base of a npn transistor in a 0.18 Ohm cm n-type Si wafer. A solid solubility limited Boron Pre-deposition is performed at 900 C for 15 min followed by a 5 hour drive-in at 1100 C.

a) Find the boron surface concentration graphically from Fig. 4.6 and calculate the B impurity dose after the pre-deposition step. Use $D_1 = 1.45 \times 10^{-15}$ cm^2/ sec for Boron diffusivity at 900 C.

b) Calculate the B surface concentration and the junction depth following the 5 hour drive-in step. Apply Fig. 4.8 to obtain the n-type background dopant concentration. Use $D_2 = 2.96 \times 10^{-13}$ cm^2/ sec for Boron diffusivity at 1100 C.

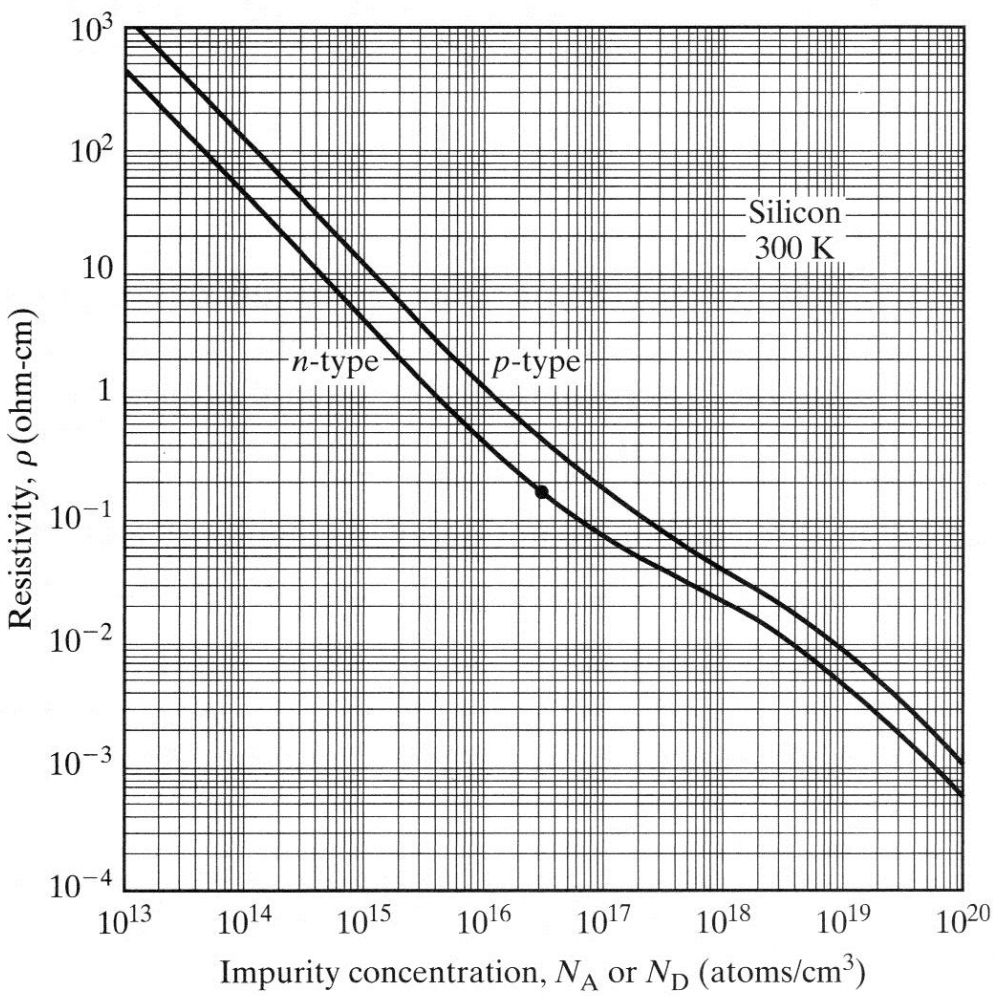

Figure 4.8: Room temperature resistivity in n- and p-type Silicon as a function of impurity concentration.

Problem E1 continued on next page

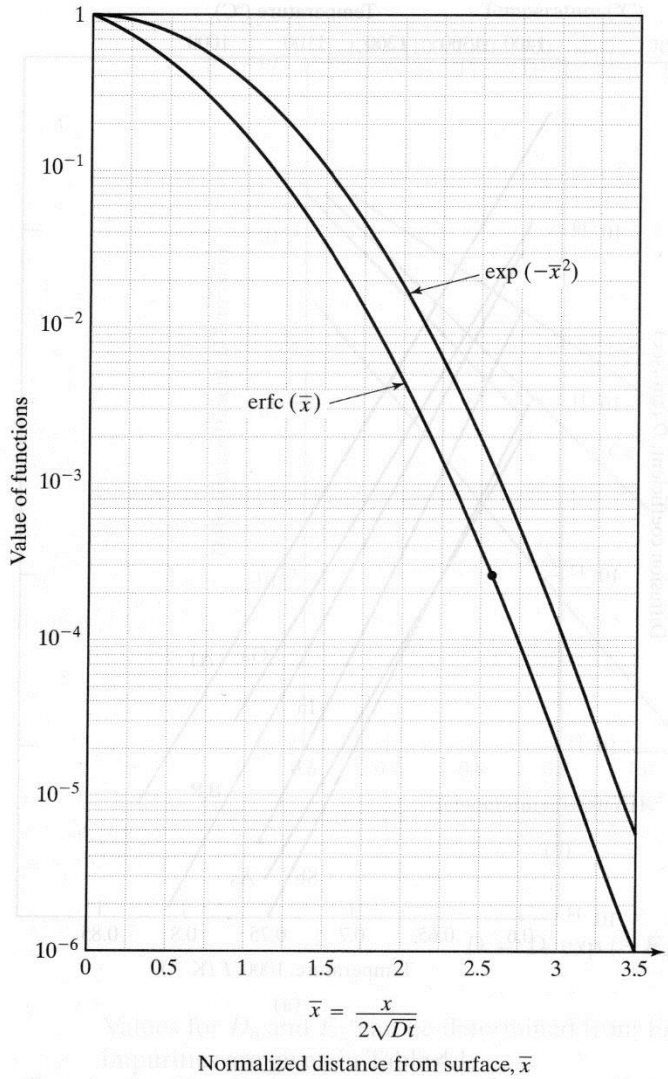

Fig. 4.4: Graphical comparison of Gaussian and complementary error function (erfc) profiles.

PROBLEM E2 – PHYSICAL ELECTRONICS II

1. Draw a (100) plane and a (222) plane for crystalline silicon

2. For a silicon one sided abrupt junction with $N_A=10^{18}$ cm^{-3} and $N_D=10^{15}$ cm^{-3}, calculate the depletion layer width, the maximum field and the junction capacitance at zero bias **and** reverse bias of 3V (T = 300K)

Data: ε_s = 105 10^{-14} F/cm

A list of equations and data is provided to you below. Please note that not all equations and data should be used.

$$J_p = q\mu_p p\left(\frac{1}{q}\frac{dE_i}{dx}\right) - kT\mu_p\frac{dp}{dx} \qquad \frac{d^2\psi}{dx^2} \equiv -\frac{d\mathscr{E}}{dx} = -\frac{\rho_s}{\varepsilon_s} = -\frac{q}{\varepsilon_s}\left(N_D - N_A + p - n\right).$$

$$V_{bi} = \psi_n - \psi_p = \frac{kT}{q}\ln\left(\frac{N_A N_D}{n_i^2}\right). \qquad N_A x_p = N_D x_n. \qquad W = x_p + x_n.$$

$$\mathscr{E}_m = \frac{qN_D x_n}{\varepsilon_s} = \frac{qN_A x_p}{\varepsilon_s}. \qquad V_{bi} = \frac{1}{2}\mathscr{E}_m W. \qquad W = \sqrt{\frac{2\varepsilon_s}{q}\left(\frac{N_A + N_D}{N_A N_D}\right)V_{bi}}.$$

$$\mathscr{E}(x) = -\mathscr{E}_m + \frac{qN_B x}{\varepsilon_s}, \qquad \mathscr{E}_m = \frac{qN_B W}{\varepsilon_s} \qquad C_j = \frac{\varepsilon_s}{W} = \sqrt{\frac{q\varepsilon_s N_B}{2(V_{bi} - V)}}$$

$$V_{bi} = \frac{kT}{q}\ln\frac{p_{po}n_{no}}{n_i^2} = \frac{kT}{q}\ln\frac{n_{no}}{n_{po}}, \qquad n_{no} = n_{po}e^{qV_{bi}/kT}.$$

$$p_{po} = p_{no}e^{qV_{bi}/kT}. \qquad n_n = n_p e^{q(V_{bi}-V)/kT}, \qquad n_p = n_{po}e^{qV/kT}$$

$$J = J_p(x_n) + J_n(-x_p) = J_s\left(e^{qV/kT} - 1\right), \qquad J_s \equiv \frac{qD_p p_{no}}{L_p} + \frac{qD_n n_{po}}{L_n},$$

Silicon (300 K): N_C= 2.86 10^{19} cm^{-3} ; N_V = 2.66 10^{19} cm^{-3} ; n_i = 9.65 10^{9} cm^{-3}

m_p =1 m_0; m_n = 0.19 m_0; m_0 = 0.91 10^{-30} kg; k = 1.38 10^{-23} J/K ; q = 1.6 10^{-19}

PROBLEM E3 – PHYSICAL ELECTRONICS II

Plasma Science & Discharges

A helium discharge operating at a pressure of 100 μTorr, has $n_e = 10^9$ cm^{-3} and Te = 10 eV.

a./ What is the electron-neutral collision frequency in the discharge?
Use a cross-section of $\sigma = 3.19\ 10^{-20}$ m^2.

b./ What is the resistivity of the plasma?

PROBLEM F1 – COMPUTER SYSTEMS

Microprocessors

Consider the following MIPS program. Assume that initially $sp is 0x10000034 and program starts at memory address 0x00400000.

```
          li $s0, 0xAAAA
          li $s1, 0xFFFF
          li $a0, 0x5
                    #(Question a is here)#
          jal set_array
                    #(Question c is here)#
stop:     j stop

set_array: addi $sp,$sp,-52
          sw $ra,48($sp)
          sw $s0,44($sp)
          sw $s1,40($sp)
          add $s0,$0,$0
          addi $s1,$0,10

loop:     add $a1,$s0,$0
                    #(Question b is here)#
          jal compare
          sll $t1,$s0,2
          add $t2,$sp,$t1
          sw $v0,0($t2)
          addi $s0,$s0,1
          bne $s0,$s1,loop
          lw $s1,40($sp)
          lw $s0,44($sp)
          lw $ra,48($sp)
          addi $sp,$sp,52
          jr $ra

compare:  addi $sp,$sp,-4
          sw $ra,0($sp)
          jal subtract
          slt $v0,$v0,$0
          slti $v0,$v0,1
          lw $ra,0($sp)
          addi $sp,$sp,4
          jr $ra

subtract: sub $v0,$a0,$a1
          jr $ra
```

Problem F1 continued on next page

a. Draw the status of the stack right before calling set-array subroutine: mark the location of stack pointer and fill out the content in the stack, if any.

b. Draw the status of the stack right before first iteration of compare subroutine: mark the location of stack pointer and fill out the content in the stack, if any.

c. Draw the status of the stack at the end of program: mark the location of stack pointer and fill out the content in the stack, if any.

d. What does this program do? Briefly.

PROBLEM F2 – COMPUTER SYSTEMS

Digital Systems

You are designing clocked sequential data processing machine. The machine has two control inputs, S & X, and a 32-bit data input A. In addition, the machine has three indicator outputs (R, D, and O) and a 32-bit data output F. The following description describes how the machine works.

- The data processing machine is to keep a running total derived from the values of the control input and data input.
- When the control input X is 0, the input A is subtracted from the running total and when X is 1, the input A is added to the running total.
- When the sequence 0101 occurs on X, while also supporting overlaps, the output R is set to 1 and the current value of the running total is output to F.
- When the sequence 110 occurs, the sequencer ignores all further changes to X and sets D=1.
- When S=1, the sequencer resets and clears the running total.
- At any point in time, when the running total overflows, the signal O should be set to 1.

1. (3 points) Show the datapath for the machine described above. Be sure to show all control signal and bus connections.
2. (5 point) Show the state machine chart for the machine described above. Be sure to note when inputs are tested and outputs are turned on.
3. (2 points) Give the implementation for the state machine using a one-hot finite state machine.

PROBLEM F3 – COMPUTER SYSTEMS

Computer Architecture

1. This following figure shows a simplified version of forwarding path in a pipelined processor.

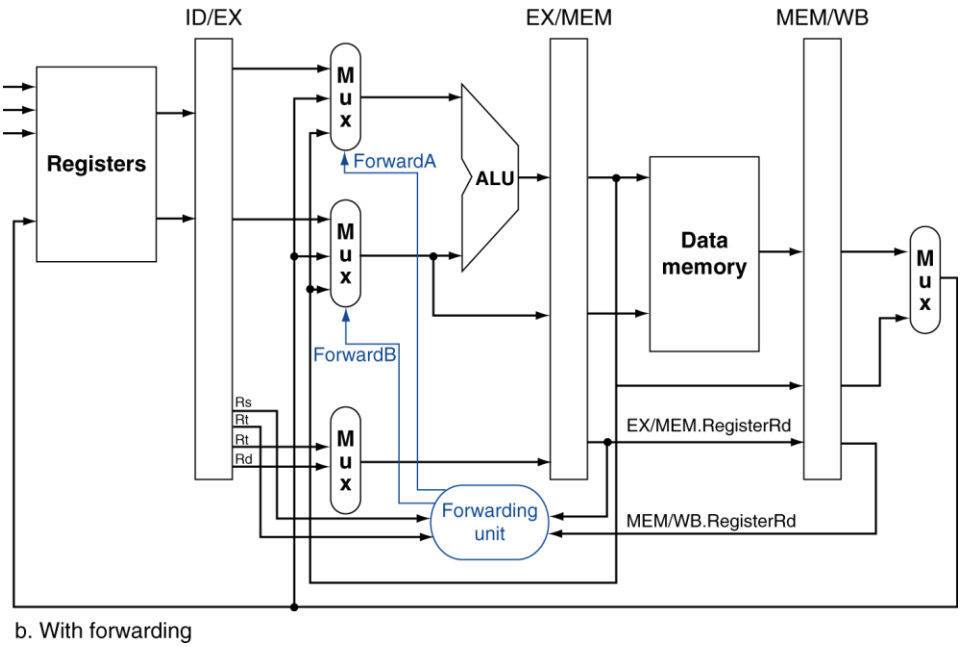

Figure 1: A simplified version of forwarding path in a pipelined processor.

Presumably, we only implement the following approach for "Forwarding Unit" shown in above figure.

- EX hazard
  - if (EX/MEM.RegWrite and (EX/MEM.RegisterRd ≠ 0)
    and (EX/MEM.RegisterRd = ID/EX.RegisterRs))
    ForwardA = 10
  - if (EX/MEM.RegWrite and (EX/MEM.RegisterRd ≠ 0)
    and (EX/MEM.RegisterRd = ID/EX.RegisterRt))
    ForwardB = 10
- MEM hazard
  - if (MEM/WB.RegWrite and (MEM/WB.RegisterRd ≠ 0)
    and (MEM/WB.RegisterRd = ID/EX.RegisterRs))
    ForwardA = 01
  - if (MEM/WB.RegWrite and (MEM/WB.RegisterRd ≠ 0)
    and (MEM/WB.RegisterRd = ID/EX.RegisterRt))
    ForwardB = 01

Considering the following sequence, what is the problem with our above-mentioned approach implemented in the Forwarding Unit? Why? (need to elaborate on how you get your answer. Without proper explanations, you will lose points.)

sub $s1,$s2,$s3
add $s1,$s1,$s3
sub $s1,$s1,$s3

PROBLEM F4 – COMPUTER SYSTEMS

Computer Algorithms

You have a graph with vertices connected to one and other with different color edges. Furthermore, each vertex is guaranteed to be connected to at least one edge of each color.

If you need a concrete example, think of airports as vertices and airlines as edges.

(4 points) Devise an algorithm that detects whether it is impossible to travel between any pair of vertices by following edges of the same color. Your algorithm should also report any and all instances where this mode of travel is impossible.

(4 points) Give the time complexity (either T(V,E) or O(V,E) where V is the number of vertices and E is the number of edges) for your algorithm from Part 1.

(2 points) In your own words, state what it means for a problem to be NP-complete.

PROBLEM F5 – COMPUTER SYSTEMS

Data Structures

1. Please provide pseudo code for following questions

   1.1 How to add a node into a binary search tree?

   1.2 How to delete a node from a binary search tree?
   E.g., given the input (2, 8, 9, 4, 0, 1, 3, 6),
   i. Construct a binary search tree according to the input sequence
   ii. Delete the node “4”

   1.3 How to join two trees into one tree?

   1.4 How to split one tree into two trees?

PROBLEM F6 – COMPUTER SYSTEMS

Logic Design

1. Given the following truth table,

A	B	C	Y (output)
0	0	0	1
0	0	1	1
0	1	0	0
0	1	1	0
1	0	0	0
1	0	1	0
1	1	0	1
1	1	1	1

(a) (5 pts) write the Boolean equation in sum-of-products form.

(b) (5 pts) Simplify the Boolean equation using Karnaugh map.